LED Rubber Utility Lamp

Product Data Sheet

January 2008

LED WhiteLight™ BRIGHTER LIGHT BETTER PERFORMANCE
INNOVATION by Grote Industries, Inc.

- Long-life LEDs
- Cost effective lighting option
- Reduced power consumption
- Rated to 50,000 hours

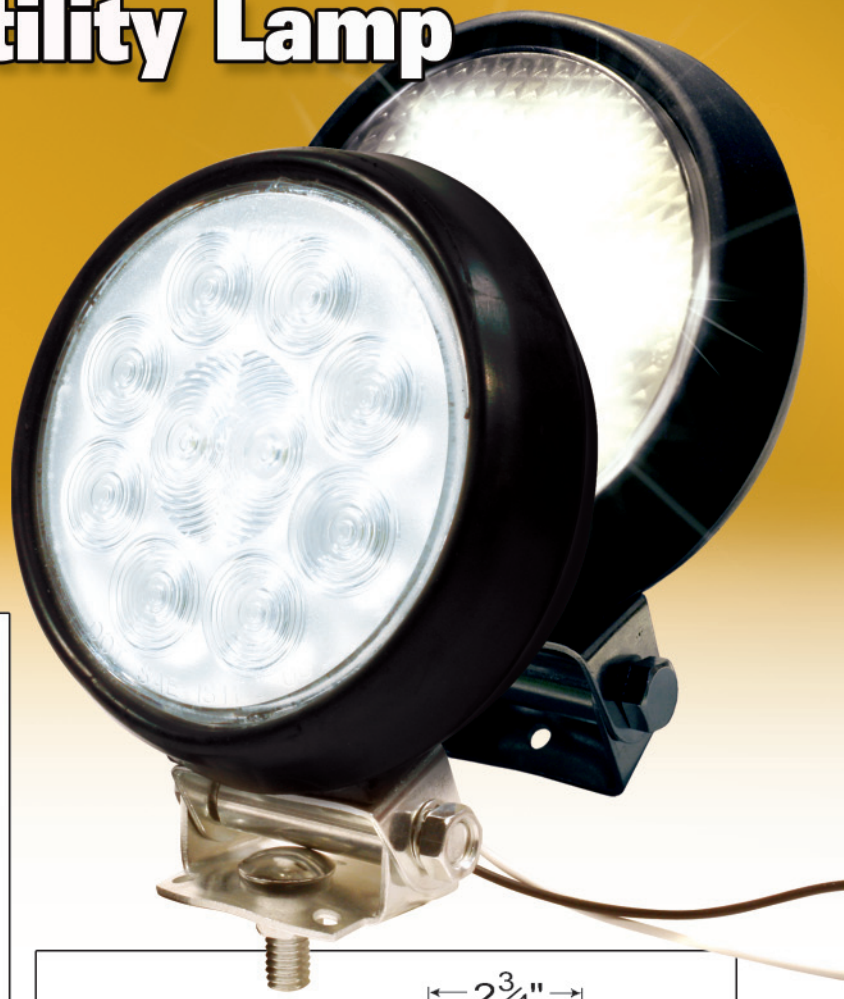

Product Features and Benefits:

- Hard wired for easy integration into current wiring system
- Low amp draw means less load on strained electrical system
- Flood pattern provides widely dispersed "peripheral" light
- Rugged, flexible, shock-absorbing, weather-proof body
- Swivel Mount

63551- Flood
63561- Spot

Material: Rubber (housing), Polycarbonate (lamp)
Finish: Black housing
Voltage/AMP: 13.5V - .6AMP
Grommets & Brackets: 64930 (housing),
43300 (magnetic mount)
Lamp only: Spot 64971, Flood 61971
Bulk pack contains 25 units

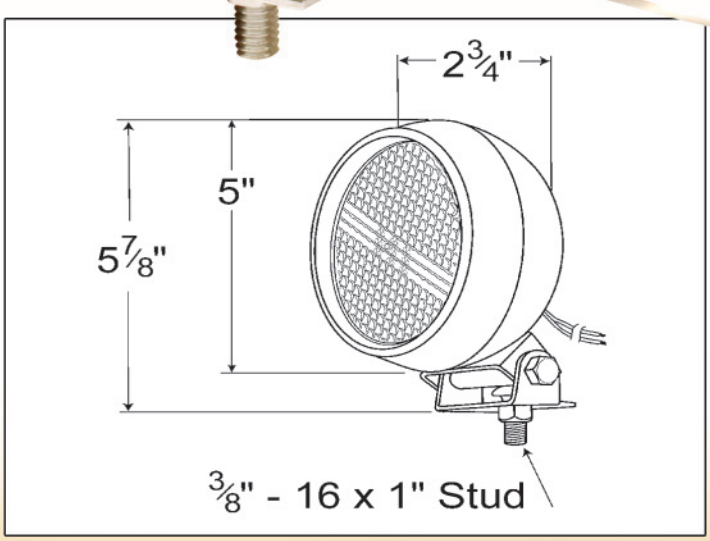

Part Number	Market	Light Source	Operating Voltage	Current Draw	Interchange
63551 (63551-3 Bulk)	All Flood/Spot	LED	13.5V	.6A	Trucklite 81360
63561 (63561-3 Bulk)	Light Applications Hook-up Lamp	LED	14V	.6A	Sound-off E36B1W

Grote®
The first name in vehicle safety systems®

2600 Lanier Drive Madison, Indiana U.S.A 47250-0550
U.S. 800.628.0809 Canada 800.268.5612

www.grote.com

GLB-2007-94