Grote LED Radius Light

RUGGED, DEPENDABLE COVERAGE FOR SAFETY AND SECURITY

Grote®

THE LIGHT

RUGGED, DEPENDABLE COVERAGE FOR SAFETY AND SECURITY.

- Tough, durable, and lightweight cast aluminum housing
- Six-200 lumen LEDS that produce daylight-like visibility in a broad area
- TIR Lens for efficiently distributed lighting
- Bi-Voltage System for 12 volt and 24 volt systems
- Vibration, dust, corrosion, and moisture resistant
- Reverse polarity protection and overvoltage protection to prevent voltage spike damage
- Spacer designed for extended installation and wire routing

Spacer/Wire Guide

Gasket for Surface Mounting

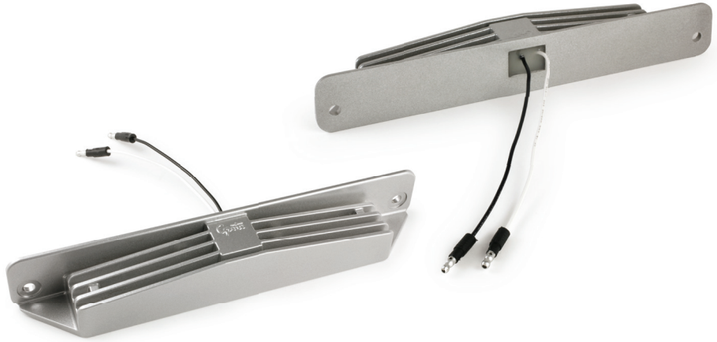

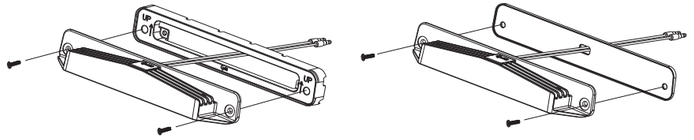

PRODUCT SPECIFICATIONS

MATERIALS
Polycarbonate Lens
Cast Aluminum Housing
Weight: 16 oz.

LIGHT ENGINE
LED
Lumens: 1200 Instant On, 1100 Effective

ELECTRONIC CHARACTERISTICS
12/24 Volts, 1.5 /0.75 Amps, 18 Watts
Overvoltage Protection

EASY TO INSTALL

Included with Grote's Radius Light are both a spacer and a gasket to make it easy to install on any vehicle. Additionally it comes with easy to follow step by step installation instructions.

WHERE CAN IT GO?

GROTE'S RADIUS LIGHT CAN GO ANYWHERE YOU NEED MORE LIGHT. FOR INSTANCE:

Back Of Cab | Trucks/Headache Racks/Gators

Door Light | Bus/RV, Ag. Sprayer, "Pups"

Panel Light | Emergency Vehicles, Oil Field, Power Gen. Units

Scene Light | Emergency Vehicles

Trailers | Horse/Race - Lift Gates

Airports | TUG Lighting

Wrecker Service | Bed Lighting

Mining | (Needs UL Approval)

Marine | Commercial Fishing Vessel work beds

Forestry/Construction | "Boom" Lighting

TeleCommuncations/Body Builders | "Boom" Lighting

Industrial | Lift Trucks/Fork Lifts/Rough Terrain

Off Highway | Zero Turn Mowers

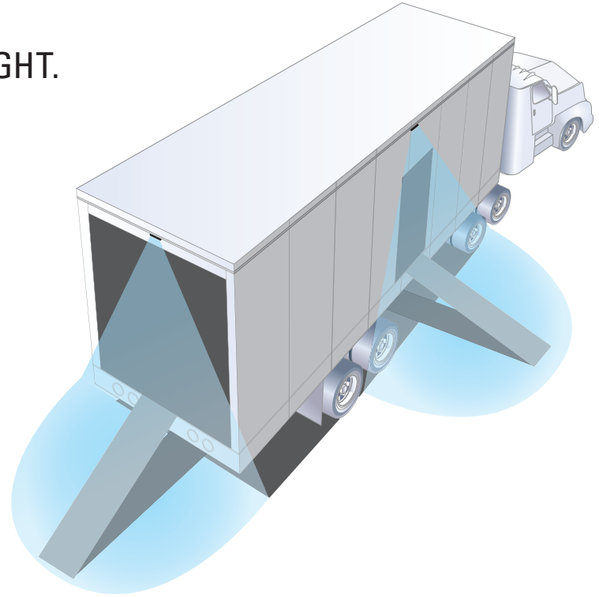

THE IDEAL LIGHT SOURCE FOR ANYWHERE YOU ENTER OR EXIT THE VEHICLE.

Thanks to Grote's Radius Light, you now have clear, bright illumination—so there is less need to worry about injury.

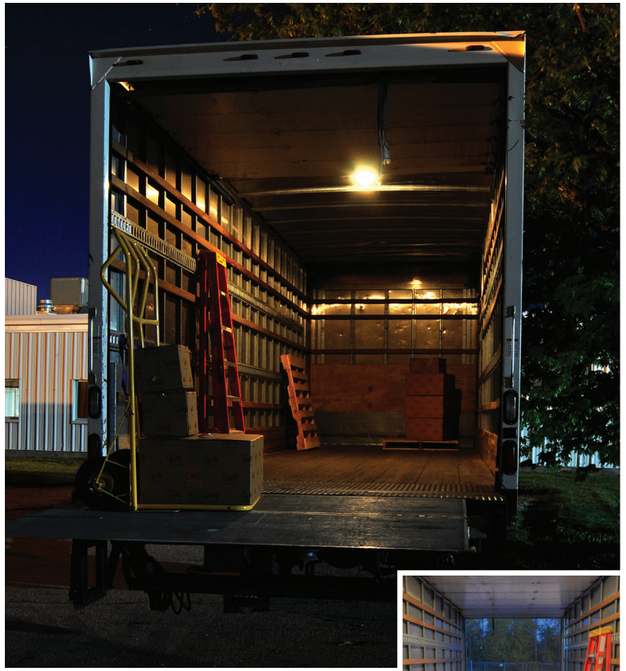

WITHOUT RADIUS LIGHT

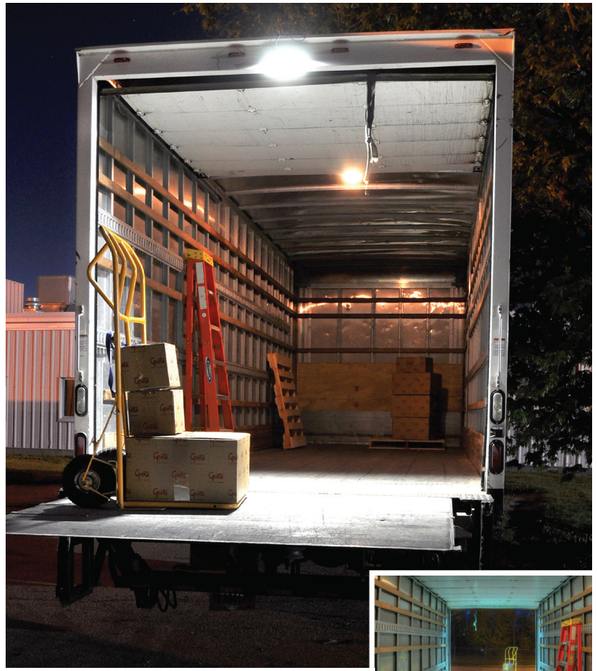

WITH RADIUS LIGHT

Grote Industries, Inc.
2600 Lanier Drive
Madison, Indiana 47250
USA
Phone: 812-273-1296
Phone: 800-628-0809
Fax: 812-265-8440
Email: safety@grote.com

Grote Industries, Co.
230 Travail Road
Markham, Ontario L3S 3J1
Canada
Phone: 905-209-9744
Phone: 800-268-5612
Fax: 905-209-9757
Fax: 800-267-9024
Email: canada@grote.com

Grote Comercial Latinoamérica S. de R.L. de C.V.
Ave. Rogelio González Caballero 225
Parque Industrial Stiva Aeropuerto
Apodaca, Nuevo León
México
Código Postal 66600
Phone: 011 (52) 81-8262-4400
Fax: 011 (52) 81-8262-4404
Email: mexico@grote.com

Grote Industries Europe GmbH
Am Schaidweg 3
D-94559 Niederwinkling
Germany
Phone: +49 9962 / 20008-0
Email: europe@grote.com

Grote (Shanghai) Vehicle Lighting Systems Co., Ltd.
485 Xin Run Road, Xinqiao Township,
Song Jiang, Shanghai, China 201612
Phone: +86.21.5774.9633
Email: asia@grote.com

grote.com

56-9519-01